UNIFORM STANDARD DRAWINGS
CLARK COUNTY AREA

VOLUME I - YEAR 2005 REVISIONS

Drawing Number	Title	Nature of Change	Effective Date
201	Minimum Back of Curb Radius	Revised to increase the property line radius at the intersection of 80' right-of-way streets with 80' right-of-way streets.	1/1/2005
202	Arterial Urban Area Street Section with Curbside Sidewalk	Revised to combine Nos. 202, 202.1 and 203 into one Drawing No. 202 and to change the requirements for open grade and dense grade and reference pavement and structural section requirements established in Specifications Section 401.	1/1/2005
202.ALT	Arterial Alternate Urban Area Street Sections with Offset Sidewalk	Revised to combine Nos. 202ALT, 202.1ALT, and 203ALT into one Drawing No. 202ALT and to change the requirements for open grade and dense grade reference pavement and structural section requirements established in Specifications Section 401.	1/1/2005
202.1		DELETED - Combined with No. 202	1/1/2005
202.1ALT		DELETED - Combined with No. 202ALT	1/1/2005
203		DELETED - Combined with No. 202	1/1/2005
203ALT		DELETED - Combined with No. 202ALT	1/1/2005
204		DELETED - Combined with No. 205	1/1/2005
204ALT		DELETED - Combined with No. 205ALT	1/1/2005
205	Collector Urban Area Street Sections with Curbside Sidewalk	Revised to combine Nos. 204 and 205 into one Drawing No. 205 and to reference pavement and structural section requirements established in Specifications Section 401.	1/1/2005
205ALT	Collector Alternate Urban Area Street Sections with Offset Sidewalk	Revised to combine Nos. 204ALT and 205ALT into one Drawing No. 205ALT and to reference pavement and structural section requirements established in Specifications Section 401.	1/1/2005
206	Local Residential Urban Area Street Section	Revised to reference pavement and structural section requirements established in Specifications Section 401.	1/1/2005
207	Local Residential Urban Area Street Sections	Revised to change the requirements for open grade and dense grade and reference pavement and structural section requirements established in Specifications Section 401.	1/1/2005
220	Tack On Island Curb	Revision to allow structural epoxy adhesive to be used in lieu of No. 4 dowel bar as approved by the entity engineer.	7/1/2005
213	Hammerhead	Revised to eliminate the hammerhead turn around as an alternative to a cul-de-sac in the City of Mesquite.	1/1/2005

217A	30" Roll Curb Residential Area	Revised to add the City of Henderson as an entity that allows rolled curb and specify the allowable rating of utility boxes and covers adjacent to the roll curb.	1/1/2005
221	Tack On Island Curb (Except City Of Henderson)	Revision to allow structural epoxy adhesive to be used in lieu of No. 4 dowel bar as approved by the entity, except the City of Henderson.	7/1/2005
234.1	Typical Bus Turn-Out	Revision to include curve data for construction layout and revision of the dimension of the bus loading pad to 8'x 30'.	7/1/2005
234.2	Typical Bus Stop Passenger Loading And Shelter Pads	Revision to include curve data for construction layout and revision of the dimension of the bus loading pad to 8'x 30'.	7/1/2005
234.3	Bus Stop Replacement Within Exclusive Right Turn Lane For Commercial Properties	Revision to include curve data for construction layout and revision of the dimension of the bus loading pad to 8'x 30'.	7/1/2005
235 Sheets 1-3	Sidewalk Ramp	Revised to include the use of paver blocks for detectable warning strips in the City of Boulder City only.	1/1/2005
249A	Sign Installation Detail	Additional drawing to address the typical installation of all roadway signage.	1/1/2005

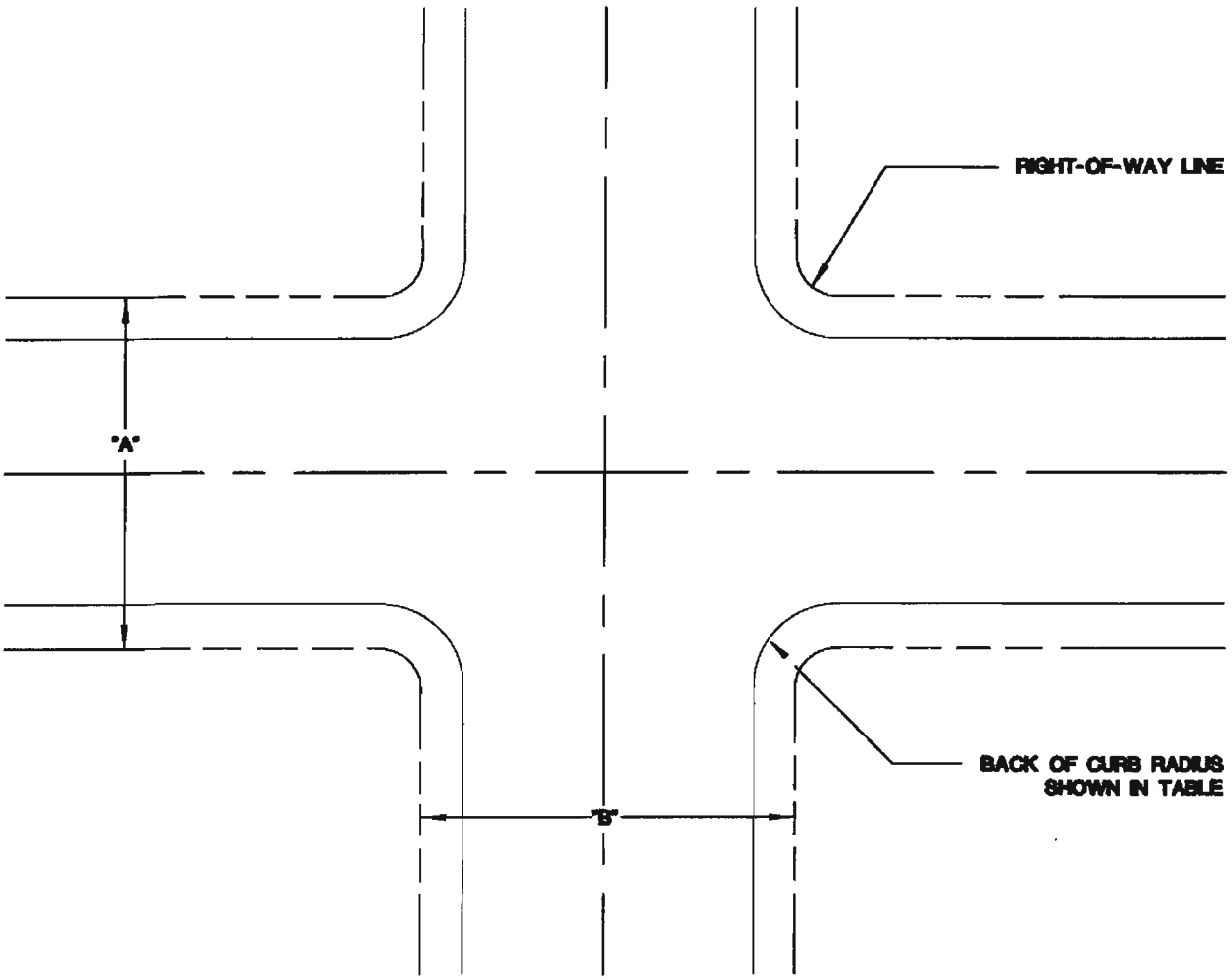

"A" \ "B"	60' OR LESS	80'	100' OR MORE
60' OR LESS	20'	25'	30'
80'	25'	** 30'	* 30'
100' OR MORE	30'	* 30'	* 30'

NOTES

PROPERTY LINES SHALL BE PARALLEL AND RADIAL TO THE BACK OF CURB AT A DISTANCE CONSISTENT WITH THE STANDARD STREET SECTIONS DRAWING NUMBERS.

* PROPERTY LINE RADIUS SHALL BE A MINIMUM OF 54 FEET.

** PROPERTY LINE RADIUS SHALL BE A MINIMUM OF 40 FEET.

SPECIFICATION REFERENCE		UNIFORM STANDARD DRAWINGS CLARK COUNTY AREA		
		MINIMUM BACK OF CURB RADIUS		
		DATE	DWG. NO. 201	PAGE NO. 7

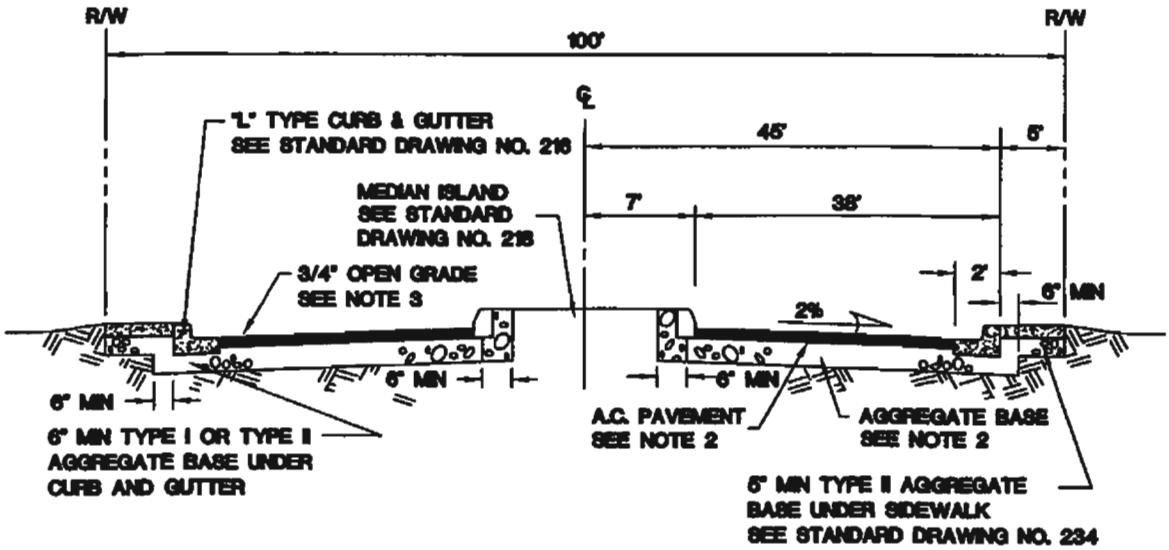

ARTERIAL WITH
MEDIAN ISLAND

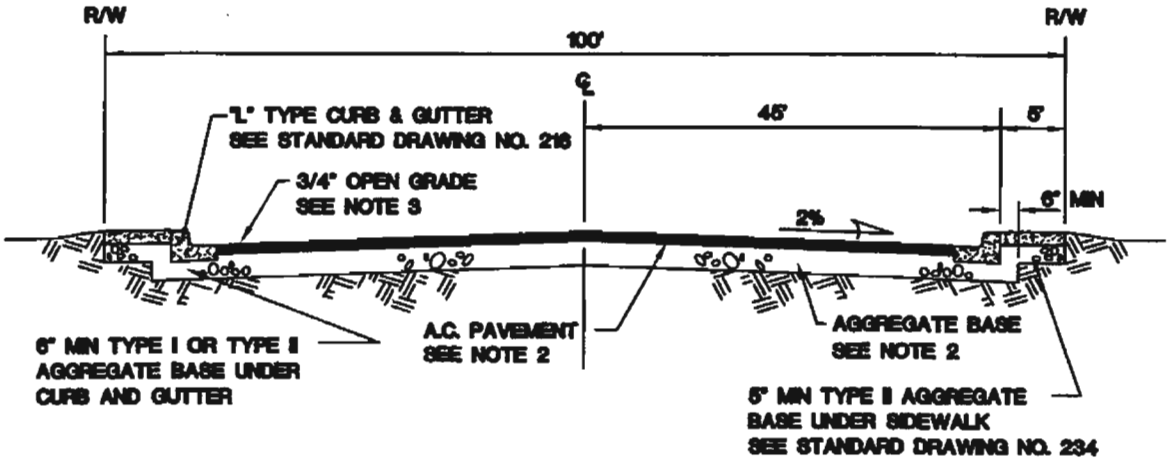

ARTERIAL WITHOUT
MEDIAN ISLAND

NOTES:

1. FINAL A.C. PAVEMENT SURFACE SHALL BE 1/2" MAXIMUM ABOVE LIP OF GUTTER. PAVEMENT SHALL BE FLUSH WITH LIP AT SIDEWALK RAMPS.
2. STRUCTURAL SECTION SHALL BE IN ACCORDANCE WITH STANDARD SPECIFICATION SECTION 401 AND STANDARD DRAWING 200.
3. A 3/4" OPEN GRADE IS REQUIRED ON CLARK COUNTY ROADWAYS AND MAY BE REQUIRED IN OTHER JURISDICTIONS AS DETERMINED BY THE ENTITY'S ENGINEER.
4. IF OPEN GRADE IS REQUIRED DENSE GRADE SHALL BE FLUSH WITH LIP OF GUTTER AND FINAL A.C. PAVEMENT SURFACE SHALL BE 3/4" MAXIMUM ABOVE LIP OF GUTTER. FINAL A.C. PAVEMENT SURFACE SHALL BE FLUSH WITH LIP AT SIDEWALK RAMPS.
5. FOG SEAL AND PRIME COAT REQUIRED IN THE CITIES OF LAS VEGAS AND NORTH LAS VEGAS.

SPECIFICATION REFERENCE	
302	AGGREGATE BASE
401	BITUMINOUS PAVEMENT
403	OPEN GRADE
501	CONCRETE

UNIFORM STANDARD DRAWINGS
CLARK COUNTY AREA

ARTERIAL
URBAN AREA STREET SECTIONS
WITH CURBSIDE SIDEWALK

DATE 11-10-04	DWG. NO. 202	PAGE NO. 8

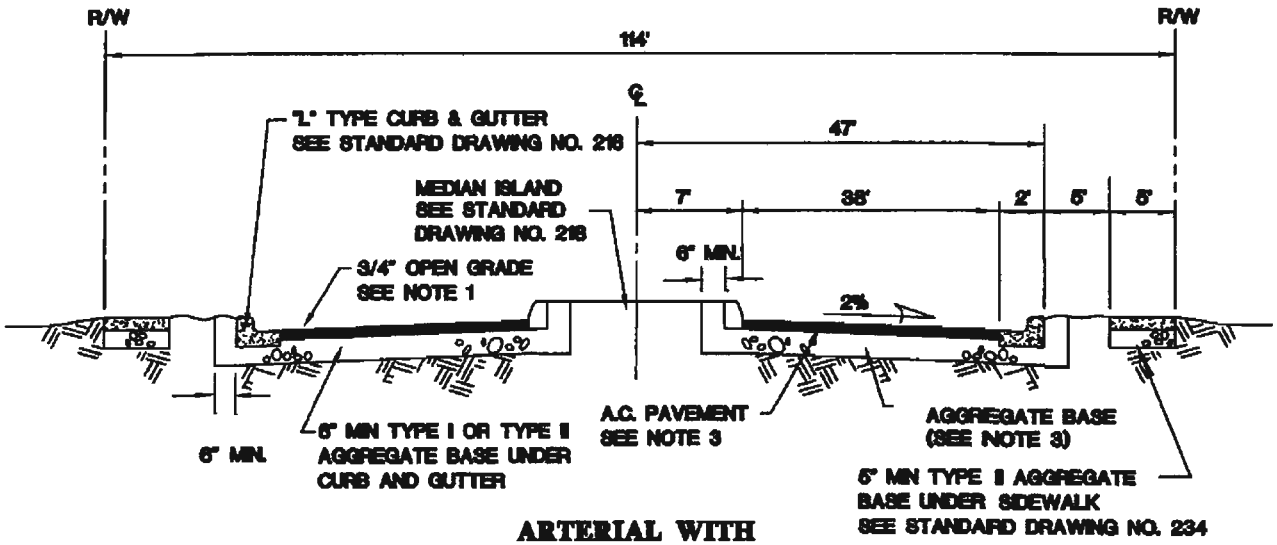

ARTERIAL WITH MEDIAN ISLAND

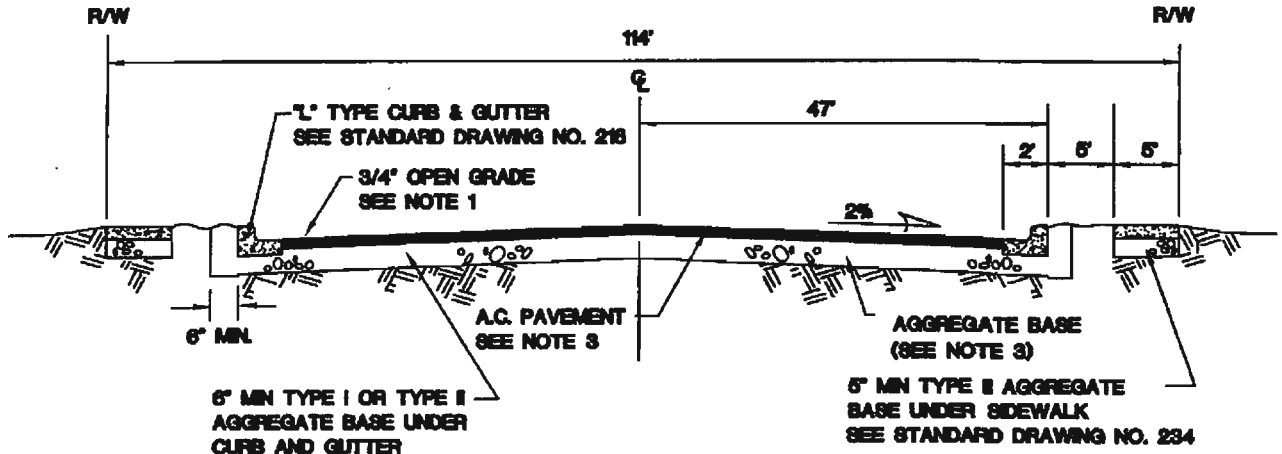

ARTERIAL WITHOUT MEDIAN ISLAND

NOTES:

1. FINAL A.C. PAVEMENT SURFACE (INCLUDING OPEN GRADE) SHALL BE 3/4" MAXIMUM ABOVE LIP OF GUTTER. PAVEMENT SHALL BE FLUSH WITH LIP AT SIDEWALK RAMPS.
2. DENSE GRADE SHALL BE FLUSH WITH LIP OF GUTTER.
3. STRUCTURAL SECTION SHALL BE IN ACCORDANCE WITH STANDARD SPECIFICATION SECTION 401 AND STANDARD DRAWING NO. 200.
4. THIS STANDARD IS AN ALTERNATE STREET SECTION TO BE USED AT LOCATIONS DETERMINED BY EACH LOCAL JURISDICITON. NO ABOVE GROUND OBJECTS SHALL BE PLACED WITHIN THE 5 FOOT SIDEWALK.
5. UNDERGROUND DRY UTILITIES SHOULD BE PLACED IN A UTILITY CORRIDOR UNDER THE SIDEWALK.
6. INCREASE PAVEMENT WIDTH BY 11 FEET ON EACH SIDE OF ROADWAY FOR AN 8 LANE CROSS SECTION.

SPECIFICATION REFERENCE	
302	AGGREGATE BASE
401	BITUMINOUS PAVEMENT
403	OPEN GRADE
501	CONCRETE

UNIFORM STANDARD DRAWINGS
CLARK COUNTY AREA

ARTERIAL
ALTERNATE URBAN AREA STREET SECTIONS WITH OFFSET SIDEWALK

DATE 11-10-04	DWG. NO. 202 ALT	PAGE NO. 8.1ALT

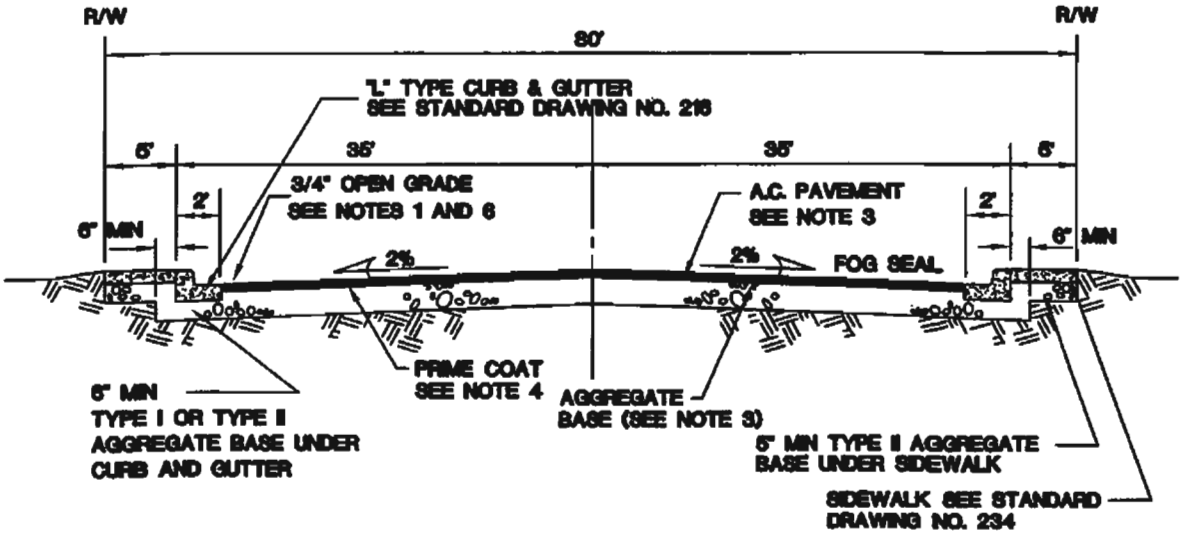

MAJOR COLLECTOR

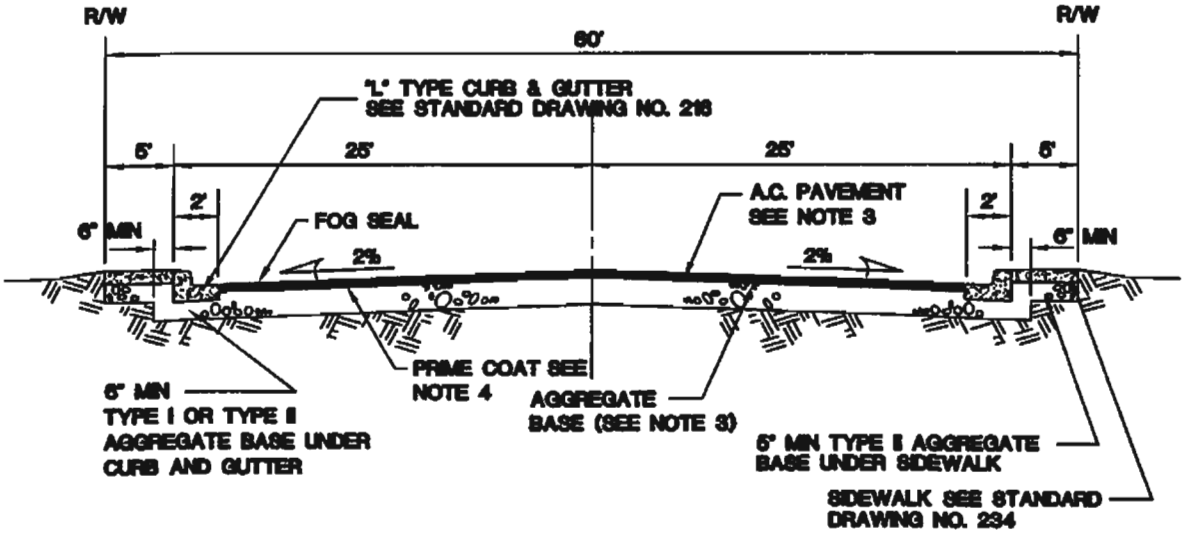

NON-RESIDENTIAL LOCAL
OR MINOR RESIDENTIAL COLLECTOR

NOTES:

1. A.C. PAVEMENT TO BE 1/2" MAXIMUM ABOVE LIP OF GUTTER AFTER COMPACTION. PAVEMENT SHALL BE FLUSH WITH LIP AT SIDEWALK RAMPS.
2. THE GRADE BREAK OCCURING IN THE CROSS SECTION SHALL FALL BETWEEN DRIVING LANES.
3. STRUCTURAL SECTION SHALL BE IN ACCORDANCE WITH STANDARD SPECIFICATION SECTION 401 AND STANDARD DRAWING NOS. 200 AND 200A.
4. PRIME COAT IS NOT REQUIRED IN HENDERSON, MESQUITE OR BOULDER CITY WHEN A.C. THICKNESS >= 5 IN.
5. 4 INCH MINUMUM THICKNESS REQUIRED IN HENDERSON, MESQUITE AND BOULDER CITY.
6. 3/4" OPEN GRADE REQUIRED IN CLARK COUNTY. OPEN GRADE IN OTHER JURISDICTIONS AS REQUIRED BY THE ENGINEER.

SPECIFICATION REFERENCE	
302	AGGREGATE BASE
401	BITUMINOUS PAVEMENT
406	PRIME COAT
407	FOG SEAL
501	CONCRETE

UNIFORM STANDARD DRAWINGS
CLARK COUNTY AREA

COLLECTOR
URBAN AREA STREET SECTIONS
WITH CURBSIDE SIDEWALK

DATE 11-10-04	DWG. NO. 205	PAGE NO. 11

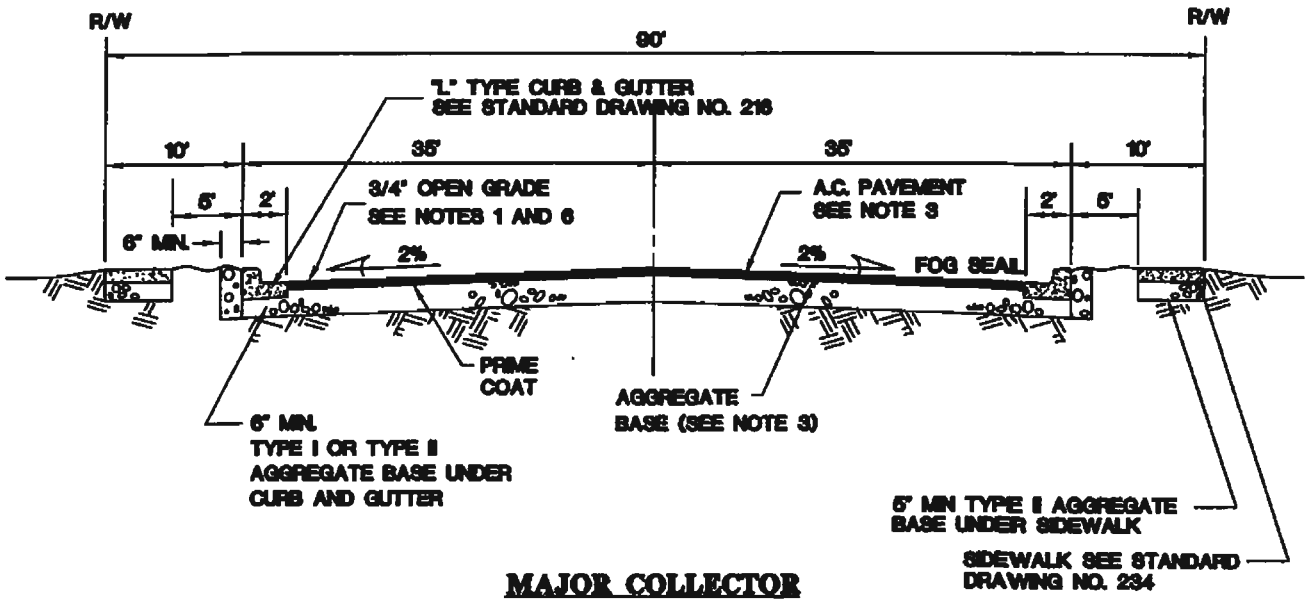

MAJOR COLLECTOR

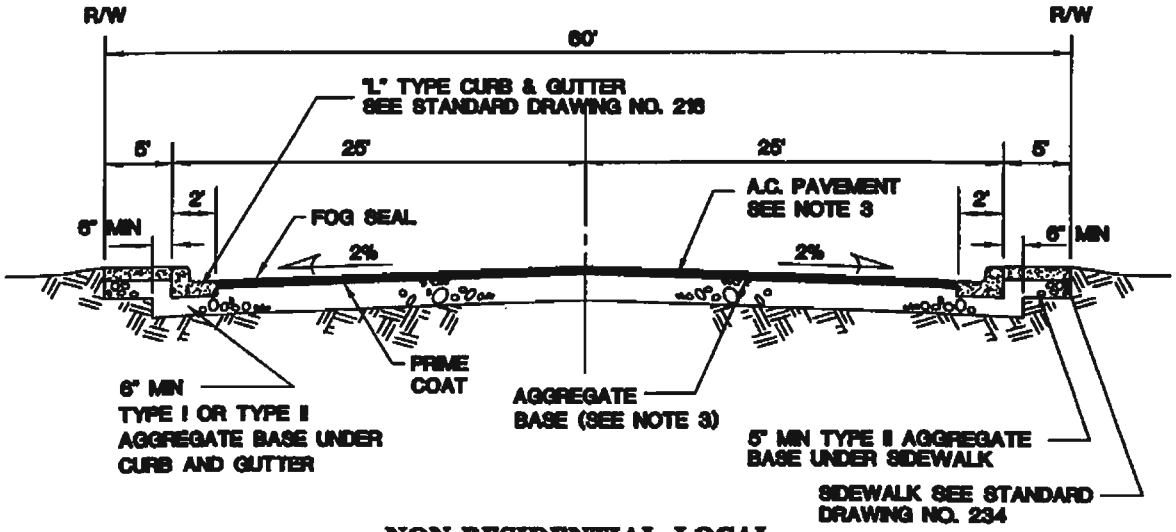

NON-RESIDENTIAL LOCAL
OR MINOR RESIDENTIAL COLLECTOR

NOTES:

1. A.C. PAVEMENT TO BE 1/2" MAXIMUM ABOVE LIP OF GUTTER AFTER COMPACTION. PAVEMENT SHALL BE FLUSH WITH LIP AT SIDEWALK RAMPS.
2. THE GRADE BREAK OCCURING IN THE CROSS SECTION SHALL FALL BETWEEN DRIVING LANES.
3. STRUCTURAL SECTION SHALL BE IN ACCORDANCE WITH STANDARD SPECIFICATION SECTION 401 AND STANDARD DRAWING NOS. 200 AND 200A.
4. THIS STANDARD IS AN ALTERNATE STREET SECTION TO BE USED AT LOCATIONS DETERMINED BY EACH LOCAL JURISDICITON. NO ABOVE GROUND OBJECTS SHALL BE PLACED WITHIN THE 5 FOOT SIDEWALK.
5. UNDERGROUND DRY UTILITIES SHOULD BE PLACED IN A UTILITY CORRIDOR UNDER THE SIDEWALK.
6. 3/4" OPEN GRADE REQUIRED IN CLARK COUNTY. OPEN GRADE IN OTHER JURISDICTIONS AS REQUIRED BY THE ENGINEER.

SPECIFICATION REFERENCE	
302	AGGREGATE BASE
401	BITUMINOUS PAVEMENT
406	PRIME COAT
407	FOG SEAL
501	CONCRETE

UNIFORM STANDARD DRAWINGS
CLARK COUNTY AREA

CLARK COUNTY, LAS VEGAS AND NORTH LAS VEGAS

COLLECTOR

ALTERNATE URBAN AREA STREET SECTIONS WITH OFFSET SIDEWALK

DATE 11-10-04	DWG. NO. 205 ALT	PAGE NO. 11ALT.

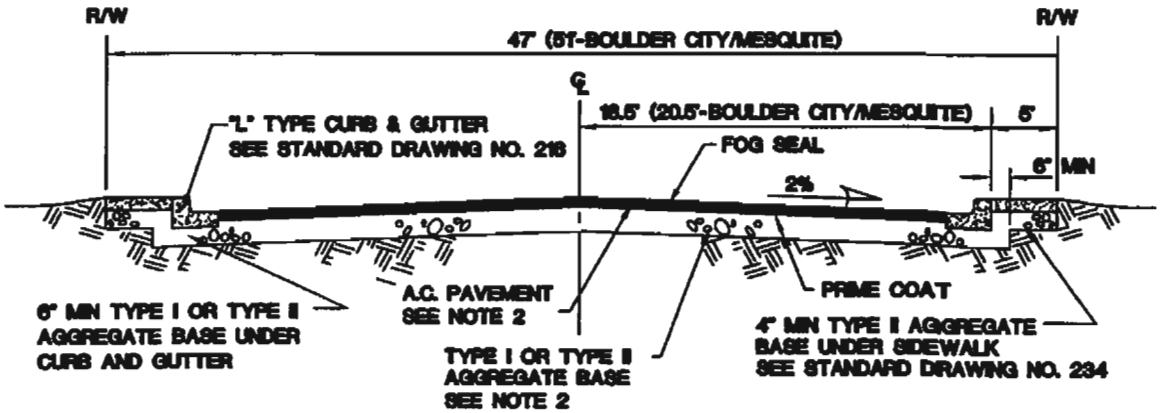

NOTES:

1. FINAL A.C. PAVEMENT SURFACE SHALL BE 1/4" MAXIMUM ABOVE LIP OF GUTTER. PAVEMENT SHALL BE FLUSH WITH LIP AT SIDEWALK RAMPS.
2. STRUCTURAL SECTION SHALL BE IN ACCORDANCE WITH STANDARD SPECIFICATION SECTION 401 AND STANDARD DRAWING NO. 200A.

SPECIFICATION REFERENCE	
302	AGGREGATE BASE
401	BITUMINOUS PAVEMENT
406	PRIME COAT
407	FOG SEAL
501	CONCRETE

UNIFORM STANDARD DRAWINGS
CLARK COUNTY AREA

HENDERSON, BOULDER CITY, MESQUITE

LOCAL RESIDENTIAL
URBAN AREA STREET SECTION

DATE 11-10-04	DWG. NO. 206	PAGE NO. 12

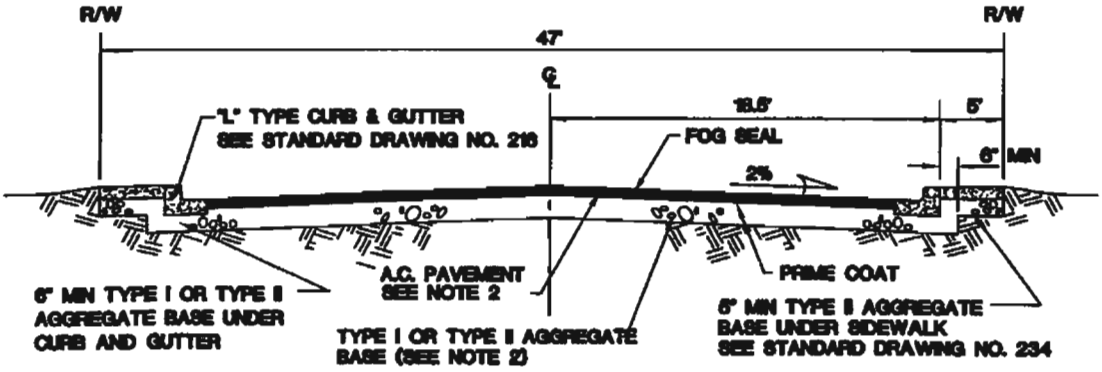

RESIDENTIAL TWO-WAY LOCAL OR CUL-DE-SAC
(OPTION "A")

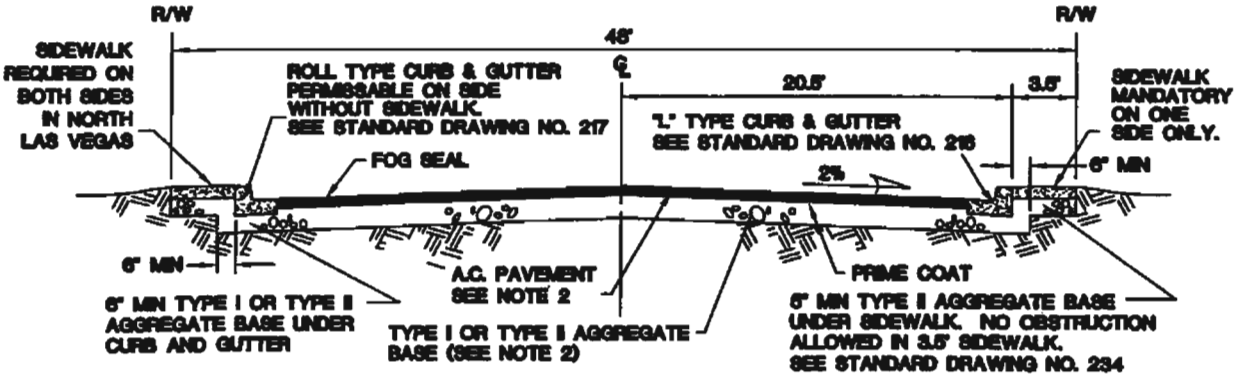

RESIDENTIAL TWO-WAY LOCAL, CUL-DE-SAC (OPTION "B")
(NOT ALLOWED IN CLV)

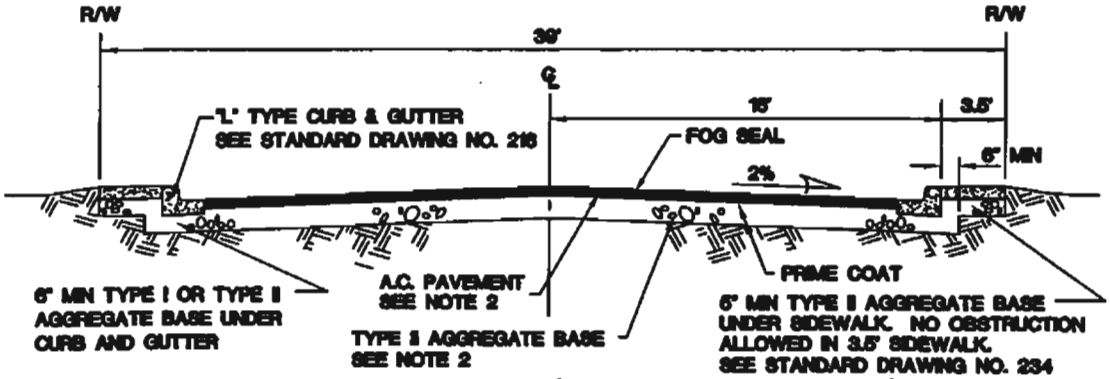

RESIDENTIAL ONE-WAY (NOT ALLOWED IN CLV)

NOTES:

1. FINAL A.C. PAVEMENT SURFACE SHALL BE 1/4" MAXIMUM ABOVE LIP OF GUTTER. PAVEMENT SHALL BE FLUSH WITH LIP AT SIDEWALK RAMPS.
2. STRUCTURAL SECTION SHALL BE IN ACCORDANCE WITH STANDARD SPECIFICATION SECTION 401 AND STANDARD DRAWING NO. 200A.
3. RESIDENTIAL ONE-WAY STREET SHALL NOT EXCEED ONE THOUSAND FEET OR TWENTY RESIDENTIAL LOTS IN LENGTH WHICHEVER IS LESS.

SPECIFICATION REFERENCE	
302	AGGREGATE BASE
401	BITUMINOUS PAVEMENT
406	PRIME COAT
407	FOG SEAL
501	CONCRETE

UNIFORM STANDARD DRAWINGS
CLARK COUNTY AREA

CLARK COUNTY, LAS VEGAS AND NORTH LAS VEGAS

LOCAL RESIDENTIAL
URBAN AREA STREET SECTIONS

DATE 11-10-04	DWG. NO. 207	PAGE NO. 13

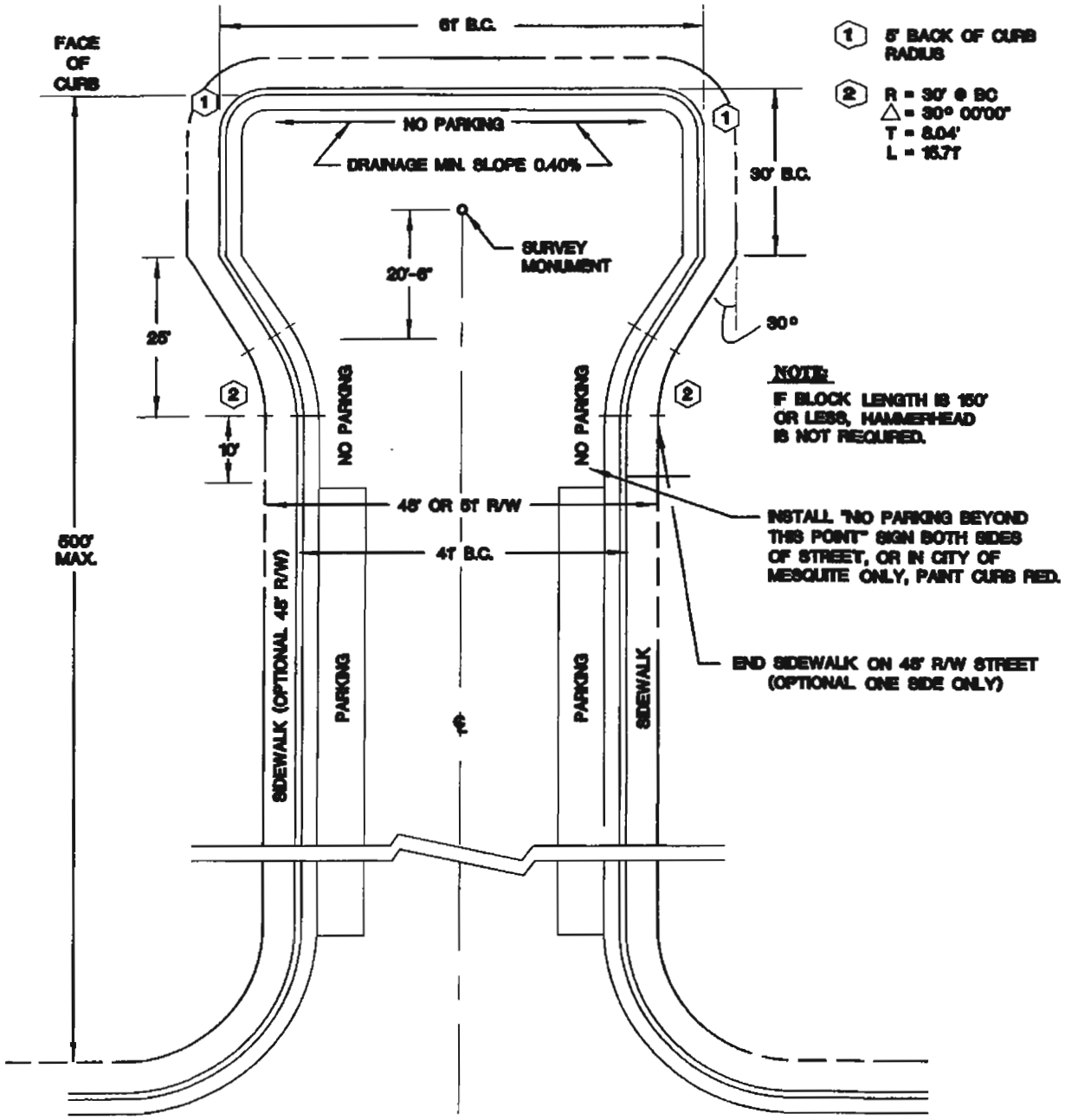

NOTE:
USE OF THE HAMMERHEAD WILL BE ALLOWED IN SINGLE FAMILY RESIDENTIAL DWELLING AREAS ONLY.

SPECIFICATION REFERENCE	UNIFORM STANDARD DRAWINGS CLARK COUNTY AREA		
	CLARK COUNTY		
	HAMMERHEAD		
	DATE 11-10-04	DWG. NO. 213	PAGE NO. 19

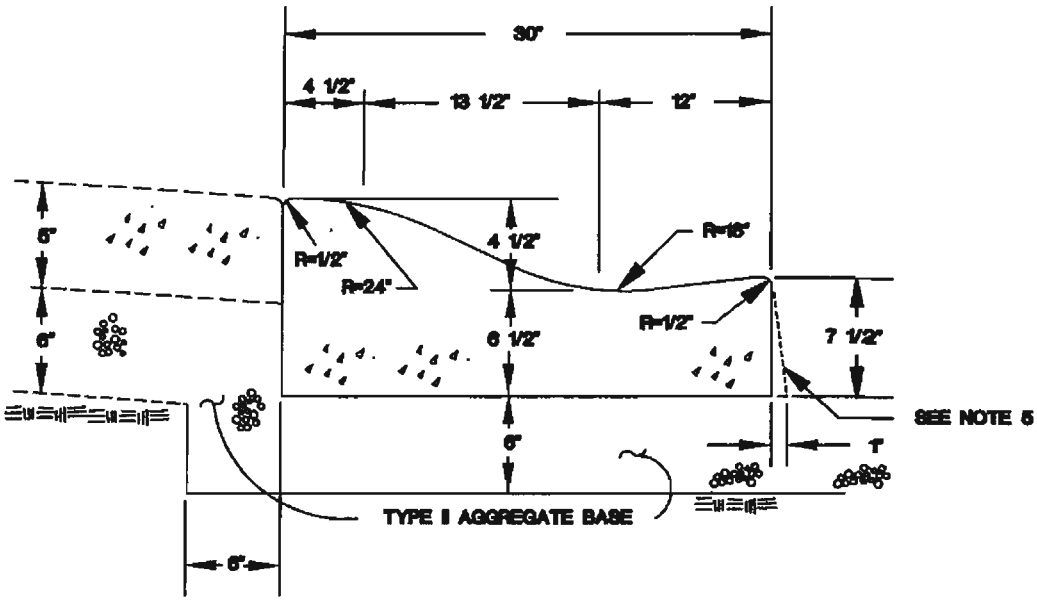

NOTES:

1. USE OF ROLL CURB MAY BE RESTRICTED BY SURFACE DRAINAGE CONSIDERATIONS.
2. SIDEWALK CONSTRUCTED CONTIGUOUS TO ROLL CURB SHALL BE 5 INCHES THICK (MIN).
3. WHERE LONGITUDINAL SLOPE IS LESS THAN 0.4% THE FLOW LINE SHALL BE WATER TESTED.
4. CONSTRUCT 1/2" EXPANSION JOINT AT ALL COLD JOINTS, AT BEGINNING AND END OF CURB RETURNS, AND AT 300 FT. MAX. INTERVALS FOR EXTRUDED CURB AND 30 FT. MAX. INTERVALS FOR FORMED CURB. WEAKENED PLANE JOINTS SHALL BE FORMED AT THE REMAINING 15 FT. INTERVALS. SEE STD. DWG. NO. 234 FOR JOINT DETAILS.
5. ONE INCH BATTER AT CURB FACE IS OPTIONAL.
6. CITY OF LAS VEGAS COUNCIL APPROVAL REQUIRED FOR USE OF 30" ROLL CURB IN THE CITY OF LAS VEGAS.
7. IN NORTH LAS VEGAS, ROLL CURBS ARE PROHIBITED IN AREAS WHERE FLOW LINE GRADIENT IS LESS THAN 0.8% UNLESS OTHERWISE APPROVED BY CITY ENGINEER.
8. ALL UTILITY BOXES AND COVERS ADJACENT TO ROLL CURB SHALL BE HS-20 RATED "TRAFFIC BEARING" TYPE

SPECIFICATION REFERENCE	
320	AGGREGATE BASE
501	CONCRETE
502	CONCRETE STRUCTURES
707	JOINT MATERIAL

UNIFORM STANDARD DRAWINGS
CLARK COUNTY AREA

CLARK COUNTY, LAS VEGAS , NORTH LAS VEGAS, AND HENDERSON ONLY

30" ROLL CURB
RESIDENTIAL AREA

DATE 11-10-04	DWG. NO. 217A	PAGE NO. 23A

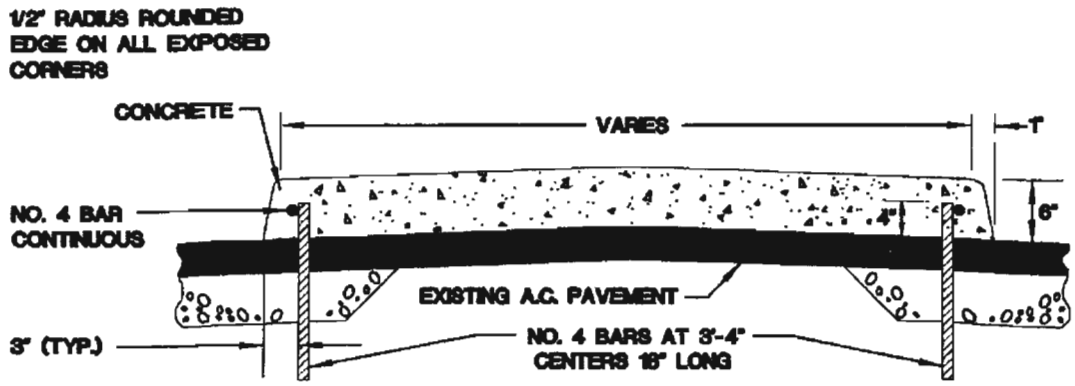

SECTION

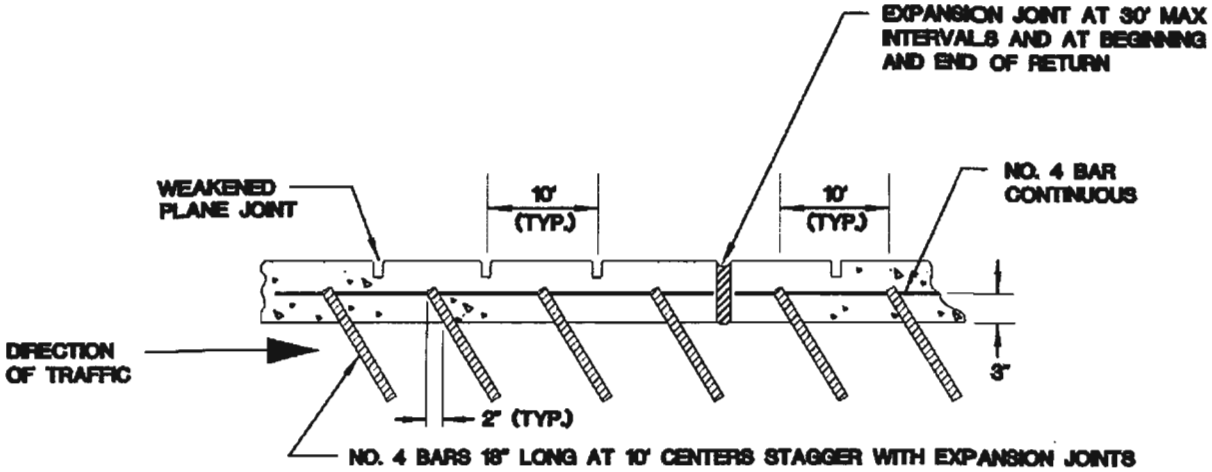

SIDE VIEW

NOTES:

1. FOR EXPANSION JOINT AND WEAKENED PLANE JOINT DETAIL, SEE STANDARD DRAWING NO. 234.
2. WHEN APPROVED BY THE ENGINEER/ENTITY, STRUCTURAL EPOXY ADHESIVE MAY BE USED IN LIEU OF NUMBER 4 DOWEL BAR EXCEPT AT CURB NOSE AND WITHIN 2 FEET OF ANY POINT OF CURVATURE.

SPECIFICATION REFERENCE	
501	CONCRETE
505	REINFORCING STEEL
707	JOINT MATERIAL

UNIFORM STANDARD DRAWINGS
CLARK COUNTY AREA

EXCEPT CITY OF HENDERSON
TACK ON ISLAND

DATE 01-13-05	DWG. NO. 221	PAGE NO. 27

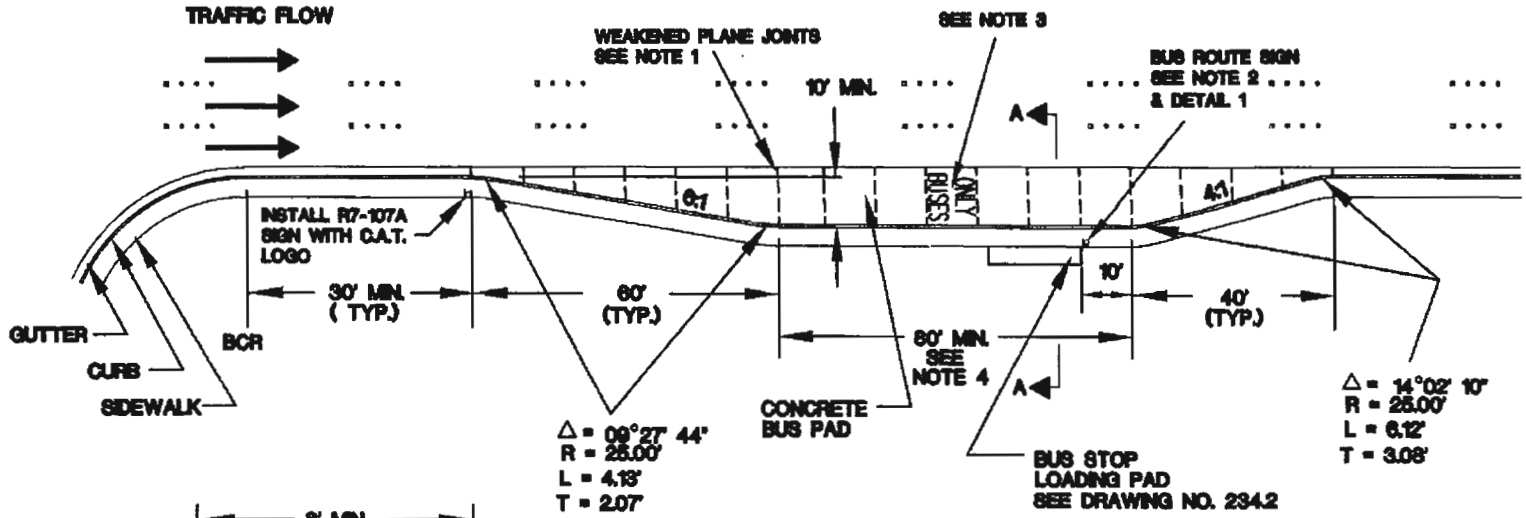

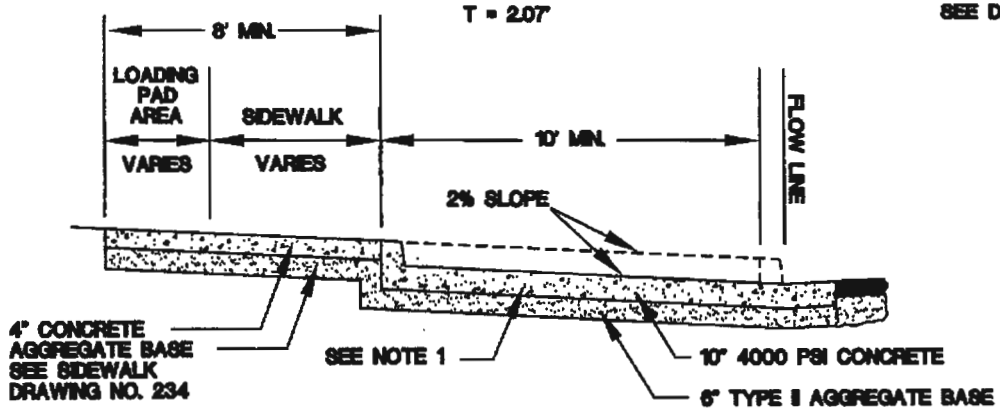

SECTION A-A

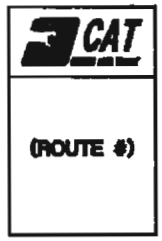

DETAIL 1
BUS ROUTE SIGN

NOTES:

1. CONCRETE BUS PAD SHALL BE MONOLITHIC. TRANSVERSE WEAKENED PLANE JOINTS SHALL BE INSTALLED AT 10' INTERVALS AND AS DETAILED IN STANDARD DRAWING NO. 233, TYPE "C".
2. BUS ROUTE SIGN SHALL BE INSTALLED AT THE DOWNSTREAM END OF BUS STOP LOADING PAD.
3. A MINIMUM OF ONE SET OF PAVEMENT MARKINGS CONTAINING THE "BUSES ONLY" SYMBOL SHALL BE PLACED IN THE TURN-OUT AREA. EXACT LOCATION TO BE DETERMINED BY THE ENGINEER.
4. ADDITIONAL STORAGE AREA WILL BE REQUIRED WHEN MORE THAN ONE BUS IS EXPECTED TO OCCUPY THE TURN-OUT AT THE SAME TIME.
5. ALTERNATE CONCRETE AND BASE THICKNESSES MAY BE SUBSTITUTED, BUT MUST BE SUPPORTED BY ENGINEERING ANALYSIS AND APPROVED BY THE ENGINEER.
6. TURN-OUT SURFACE SHALL BE TEXTURED IN ACCORDANCE WITH UNIFORM STANDARD SPECIFICATION NO. 409.03.08. FLOW LINE SHALL NOT BE TEXTURED, BUT SHALL BE A TROWELED SURFACE.

SPECIFICATION REFERENCE

302	AGGREGATE BASE
501	CONCRETE
502	CONCRETE STRUCTURES

UNIFORM STANDARD DRAWINGS
CLARK COUNTY AREA

TYPICAL BUS TURN-OUT

DATE 05-19-06	DWG. NO. 234.1	PAGE 40.1

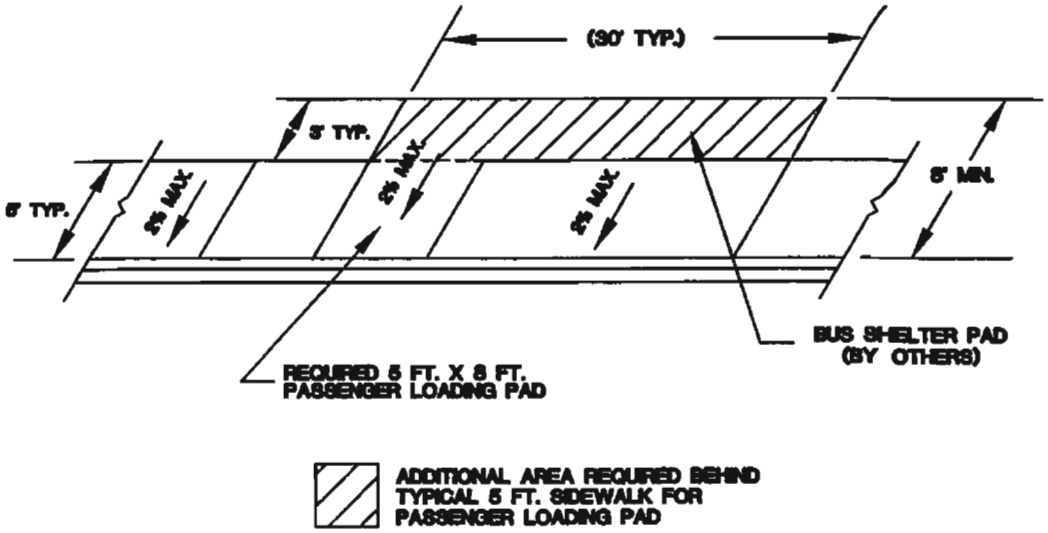

NOTES:

1. SIDEWALK RAMP MAY BE REQUIRED TO BE CONSTRUCTED IN THOSE LOCATIONS WHERE THE BUS STOP WOULD OTHERWISE BE INACCESSIBLE AS DEFINED BY THE AMERICANS WITH DISABILITIES ACT. SEE DRAWING NO. 235, SHEET 4 OF 5 FOR SIDEWALK RAMP DETAILS.
2. ADDITIONAL RIGHT-OF-WAY OR EASEMENT IS REQUIRED FOR LOADING PAD AND VARIABLE HEIGHT CURB AT BACK OF SIDEWALK RAMP.
3. AGGREGATE BASE AND CONCRETE FOR LOADING PAD SHALL BE THE SAME AS REQUIRED FOR SIDEWALK. SEE DRAWING NO. 234.
4. LOADING PAD CONNECTION TO DETACHED SIDEWALK CONDITION SHALL BE DETERMINED BY THE ENTITIES.

SPECIFICATION REFERENCE	
302	AGGREGATE BASE
501	CONCRETE
502	CONCRETE STRUCTURES

UNIFORM STANDARD DRAWINGS
CLARK COUNTY AREA

TYPICAL BUS STOP PASSENGER LOADING AND SHELTER PADS

DATE 05-19-05	DWG. NO. 234.2	PAGE 40.2

NOTES:

1. IF ARTICULATED BUSES ARE EXPECTED TO SERVICE BUS STOP, DISTANCE FROM END OF ENTRY TAPER TO THE END OF THE BUS STOP LOADING PAD SHALL BE INCREASED TO 70 FT. MIN. AND THE RIGHT TURN STORAGE LANE LENGTH SHALL BE INCREASED TO 120 FT. MIN.
2. WHERE ADDITIONAL MOTORIST GUIDANCE IS DEEMED NECESSARY BY THE ENGINEER, INSTALL ARROW AND "ONLY" SYMBOL PAVEMENT MARKINGS FOR THE LENGTH OF THE STORAGE LINE. SYMBOLS SHALL BE APPROVED TYPE I PAVEMENT MARKING FILM.
3. STORAGE LANE LINE SHALL BE APPROVED TYPE I PAVEMENT MARKING FILM, OR IF APPROVED BY THE ENGINEER, RAISED PAVEMENT MARKERS MAY BE USED.
4. REVERSE CURVE TRANSITION MAY BE USED SUBJECT TO THE APPROVAL OF THE ENGINEER.

SPECIFICATION REFERENCE	
302	AGGREGATE BASE
501	CONCRETE
502	CONCRETE STRUCTURES
628	PAINTING TRAFFIC STRIPING, PAVEMENT MARKINGS

UNIFORM STANDARD DRAWINGS
CLARK COUNTY AREA

BUS STOP PLACEMENT WITHIN EXCLUSIVE RIGHT TURN LANE FOR COMMERCIAL PROPERTIES

DATE 05-19-05	DWG. NO. 234.3	PAGE 40.3

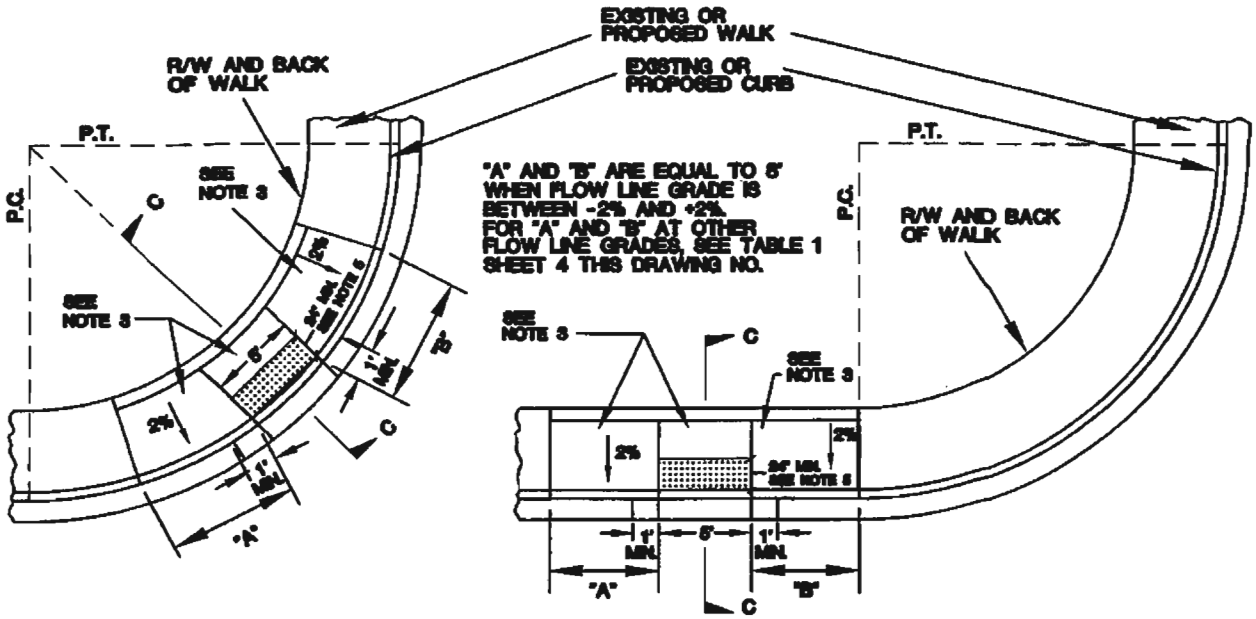

RAMP IN CURB RETURN

RAMP OUTSIDE CURB RETURN

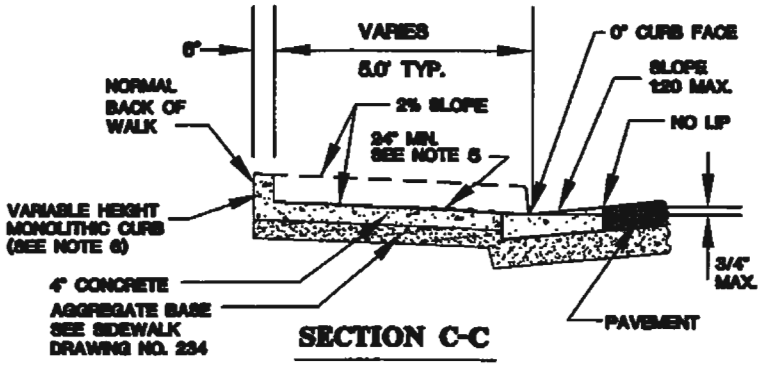

SECTION C-C

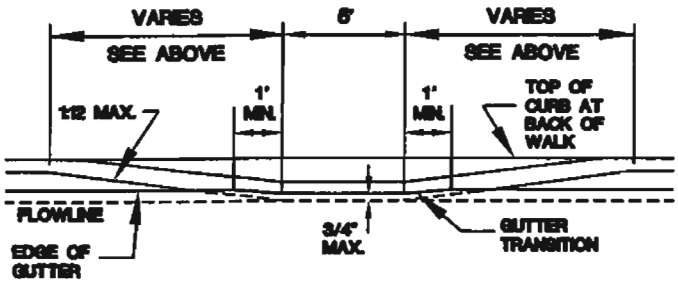

PROFILE

NOTES:

1. SIDEWALK RAMP WITHIN CURB RETURN SHALL BE LOCATED AT THE MIDPOINT OF CURB RETURN UNLESS OTHERWISE APPROVED.
2. SIDEWALK RAMPS OUTSIDE OF THE CURB RETURN SHALL BE LOCATED ADJACENT TO THE RETURN UNLESS OTHERWISE APPROVED.
3. RAMPS SHALL BE CONSTRUCTED WITH A ROUGH BROOM FINISH TRANSVERSE TO THE SLOPE OF THE RAMP.
4. WHEN CONSTRUCTING RAMP WHERE CURB & GUTTER EXISTS, COMPLETELY REMOVE INTERFERING PORTIONS OF EXISTING CURB & GUTTER.
5. DETECTABLE WARNING CONSISTING OF RAISED TRUNCATED DOMES WHICH COMPLY WITH DETAILS ON SHEET 4 OF THIS DRAWING NO. AND CONTRASTING VISUALLY WITH ADJOINING SURFACES SHALL BE PLACED ON BOTTOM PORTION OF RAMP EXTENDING THE FULL WIDTH OF THE RAMP AND TO A MINIMUM DEPTH OF 24 INCHES. PAVER BLOCKS PERMITTED ONLY IN THE CITY OF BOULDER CITY FOR DETECTABLE WARNING AREAS.
6. CURB MAY BE PLACED AND IS PREFERRED BEHIND BACK OF WALK IF SUFFICIENT RIGHT-OF-WAY OR EASEMENTS EXIST AND AS APPROVED BY THE ENGINEER.

SPECIFICATION REFERENCE	
302	AGGREGATE BASE
501	CONCRETE
502	CONCRETE STRUCTURES

UNIFORM STANDARD DRAWINGS
CLARK COUNTY AREA

SIDEWALK RAMP
CASE I

DATE 11-10-04 | DWG. NO. 235 (1 OF 4) | PAGE 41

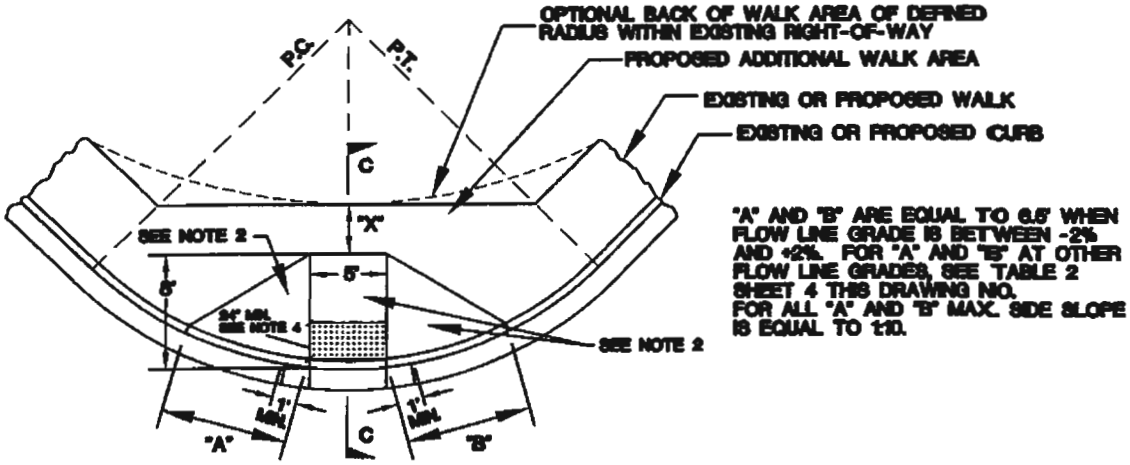

RAMP IN CURB RETURN

(NO BACK OF WALK DEPRESSION)

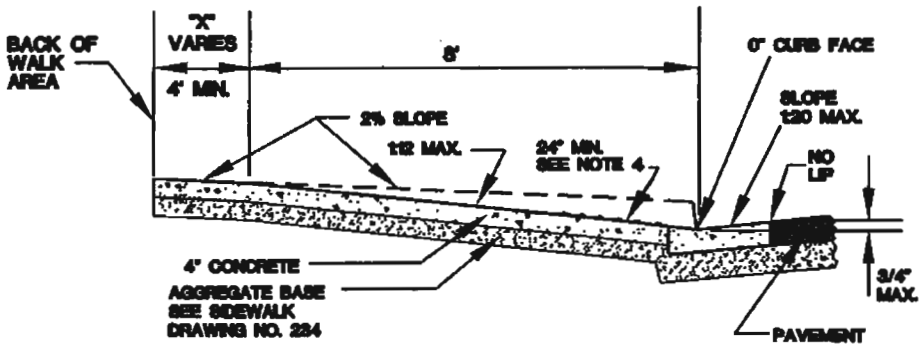

SECTION C-C

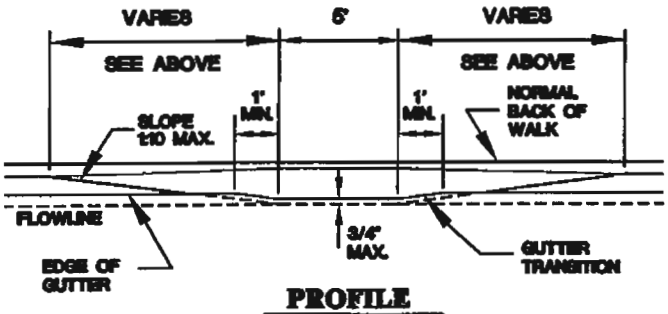

PROFILE

CASE II SHALL BE USED WHERE R/W AND FIELD CONDITIONS PERMIT.

NOTES:

1. SIDEWALK RAMP WITHIN CURB RETURN SHALL BE LOCATED AT THE MIDPOINT OF CURB RETURN UNLESS OTHERWISE APPROVED.
2. RAMPS SHALL BE CONSTRUCTED WITH A ROUGH BROOM FINISH TRANSVERSE TO THE SLOPE OF THE RAMP.
3. WHEN CONSTRUCTING RAMP WHERE CURB & GUTTER EXISTS, COMPLETELY REMOVE INTERFERING PORTIONS OF EXISTING CURB & GUTTER.
4. DETECTABLE WARNING CONSISTING OF RAISED TRUNCATED DOMES WHICH COMPLY WITH DETAILS ON SHEET 4 OF THIS DRAWING NO. AND CONTRASTING VISUALLY WITH ADJOINING SURFACES SHALL BE PLACED ON BOTTOM PORTION OF RAMP EXTENDING THE FULL WIDTH OF THE RAMP AND TO A MINIMUM DEPTH OF 24 INCHES. PAVER BLOCKS PERMITTED ONLY IN THE CITY OF BOULDER CITY FOR DETECTABLE WARNING AREAS.

SPECIFICATION REFERENCE	
302	AGGREGATE BASE
501	CONCRETE
502	CONCRETE STRUCTURES

UNIFORM STANDARD DRAWINGS
CLARK COUNTY AREA

SIDEWALK RAMP
CASE II

DATE 11-10-04 | DWG. NO. 235 (2 OF 4) | PAGE 41A

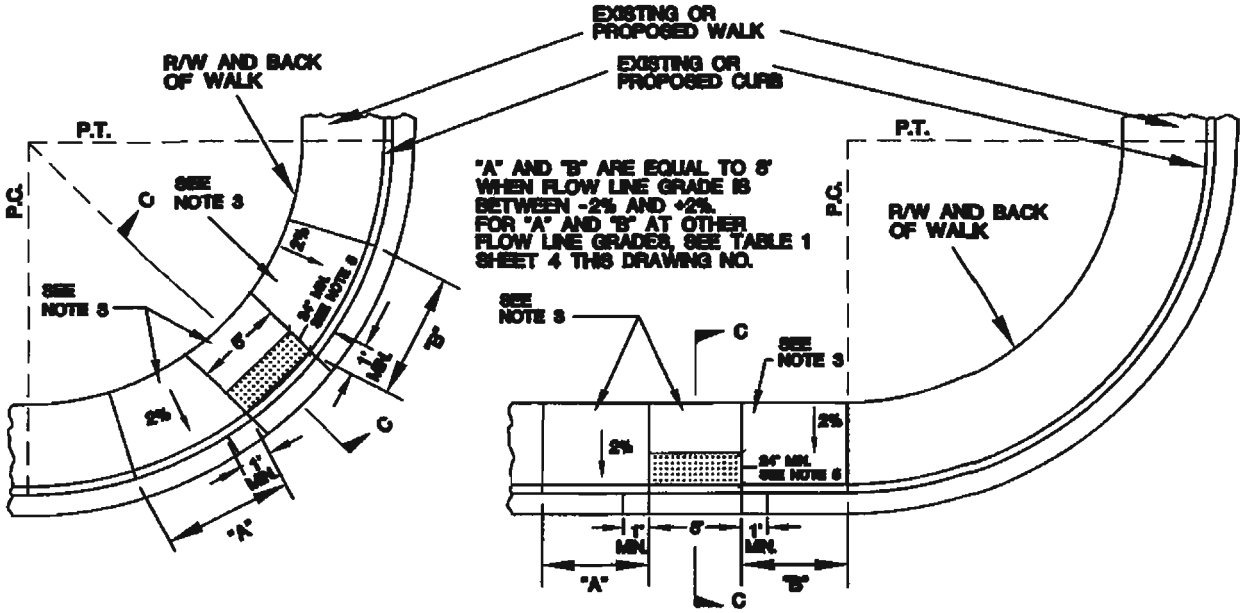

RAMP IN CURB RETURN

RAMP OUTSIDE CURB RETURN

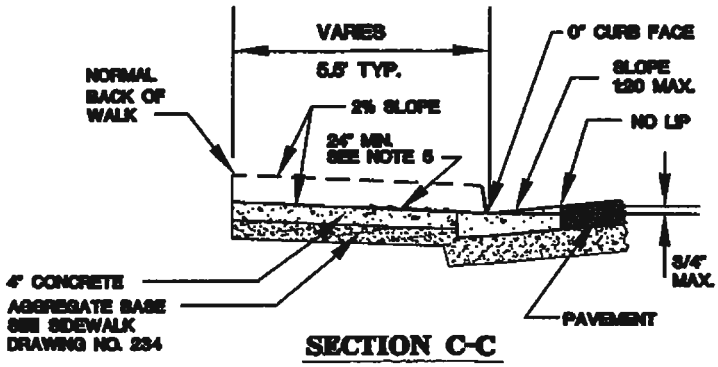

SECTION C-C

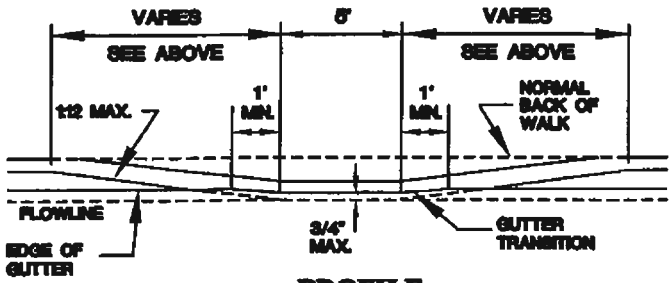

PROFILE

CASE III TO BE USED FOR AREAS WHERE OBSTRUCTION (I.E. BLOCK WALL) EXISTS AT BACK OF WALK ONLY WHEN APPROVED BY THE ENGINEER.

NOTES:

1. SIDEWALK RAMP WITHIN CURB RETURN SHALL BE LOCATED AT THE MIDPOINT OF CURB RETURN UNLESS OTHERWISE APPROVED.
2. SIDEWALK RAMPS OUTSIDE OF THE CURB RETURN SHALL BE LOCATED ADJACENT TO THE RETURN UNLESS OTHERWISE APPROVED.
3. RAMPS SHALL BE CONSTRUCTED WITH A ROUGH BROOM FINISH TRANSVERSE TO THE SLOPE OF THE RAMP.
4. WHEN CONSTRUCTING RAMP WHERE CURB & GUTTER EXISTS, COMPLETELY REMOVE INTERFERING PORTIONS OF EXISTING CURB & GUTTER.
5. DETECTABLE WARNING CONSISTING OF RAISED TRUNCATED DOMES WHICH COMPLY WITH DETAILS ON SHEET 4 OF THIS DRAWING NO. AND CONTRASTING VISUALLY WITH ADJOINING SURFACES SHALL BE PLACED ON BOTTOM PORTION OF RAMP EXTENDING THE FULL WIDTH OF THE RAMP AND TO A MINIMUM DEPTH OF 24 INCHES. PAVER BLOCKS PERMITTED ONLY IN THE CITY OF BOULDER CITY FOR DETECTABLE WARNING AREAS.

SPECIFICATION REFERENCE	
302	AGGREGATE BASE
501	CONCRETE
502	CONCRETE STRUCTURES

UNIFORM STANDARD DRAWINGS
CLARK COUNTY AREA

SIDEWALK RAMP
CASE III

DATE 11-10-04 | DWG. NO. 235 (3 OF 4) | PAGE 41B

URBAN INSTALLATIONS
SEE NOTE 9

RURAL INSTALLATIONS
(NO LANDSCAPING)

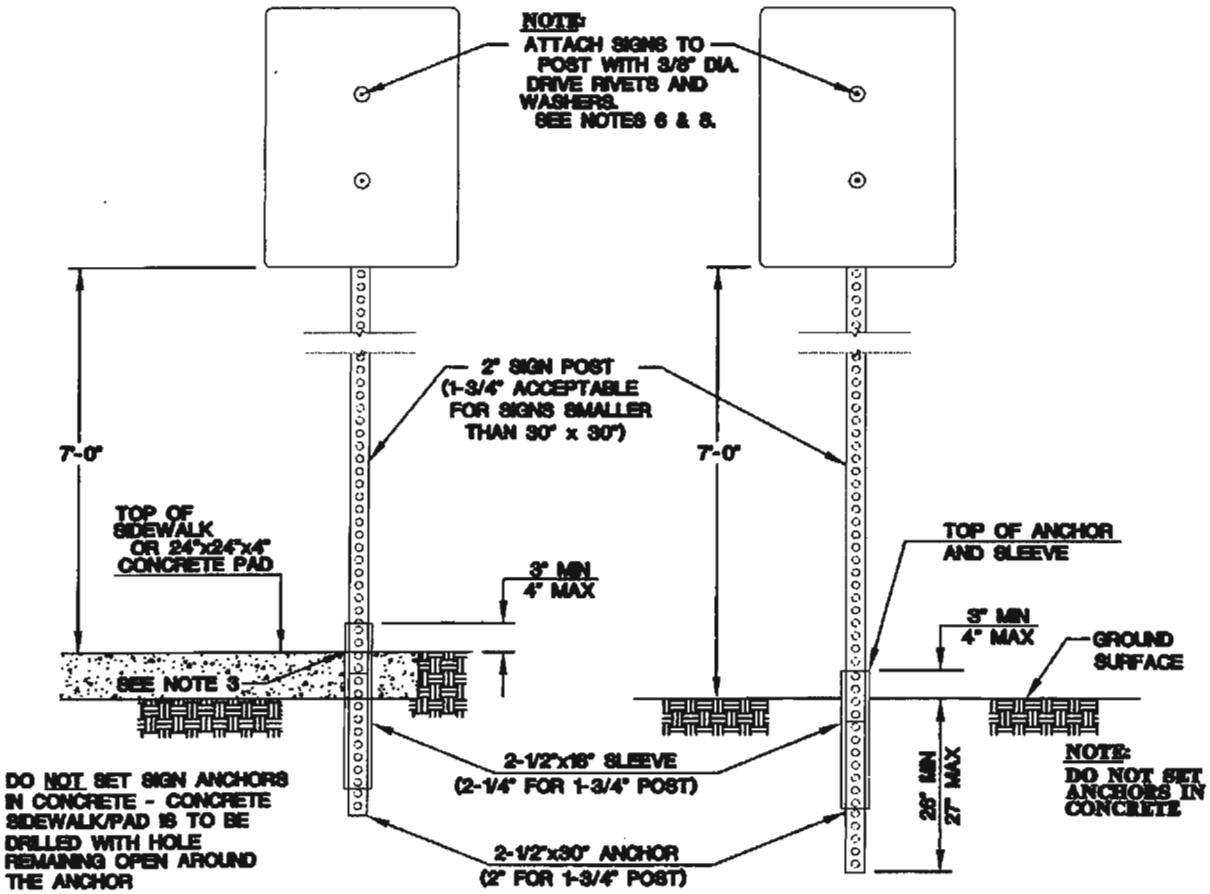

NOTES:

1. ALL COMPONENTS SHALL BE MINIMUM 12 GA. SQUARE POST WITH 7/16" PUNCHED THRU HOLES @ 1" ON CENTER, ON ALL FOUR SIDES. ANCHORS SHALL BE TWO PIECE BREAKAWAY ANCHORS.
2. ATTACH ANCHOR AND SLEEVE TOGETHER PRIOR TO DRIVING INTO GROUND. LEAVE AT LEAST TWO HOLES, BUT NO MORE THAN THREE HOLES ABOVE GROUND OR ABOVE SIDEWALK.
3. FOR SIDEWALK INSTALLATION, DRILL SIDEWALK AND CONCRETE PAD INSTALLATION, DRILL A 3" TO 4" DIA. HOLE (DEPENDENT UPON ANCHOR SIZE), THE CENTER TO BE 6" FROM THE BACK OF SIDEWALK.
4. ATTACH POST TO ANCHORING SYSTEM BY USING AT LEAST TWO 3/8" DIA. DRIVE RIVETS.
5. PROVIDE 4" MINIMUM LAP BETWEEN BOTTOM OF POST AND THE BOTTOM OF THE ANCHOR/SLEEVE ASSEMBLY.
6. SIGNS LARGER THAN 24"x30" REQUIRE 3/8" x 1-1/2" FENDER WASHERS UNDER DRIVE RIVETS.
7. "U-CHANNEL" POSTS ARE NOT ACCEPTABLE.
8. BOLTS IN LIEU OF DRIVE RIVETS ARE NOT ACCEPTABLE.
9. ALL URBAN SIGN INSTALLATIONS ARE TO BE INSTALLED IN A CONCRETE SIDEWALK, OR IN A CONCRETE PAD (24"x24"x4") WHEN NO SIDEWALK EXISTS.
10. INSTALLATION OF SIGNS SHALL MEET LATEST ADA REQUIREMENTS.
11. SIGNS SHALL HAVE A STICKER AT THE BACK WITH THE NAME OF THE CONTRACTOR AND THE DATE OF INSTALLATION.

SPECIFICATION REFERENCE	
631	STREET NAME SIGNS

UNIFORM STANDARD DRAWINGS
CLARK COUNTY AREA

SIGN INSTALLATION DETAIL

DATE 11-10-04	DWG. NO. 249A	PAGE NO. 55A

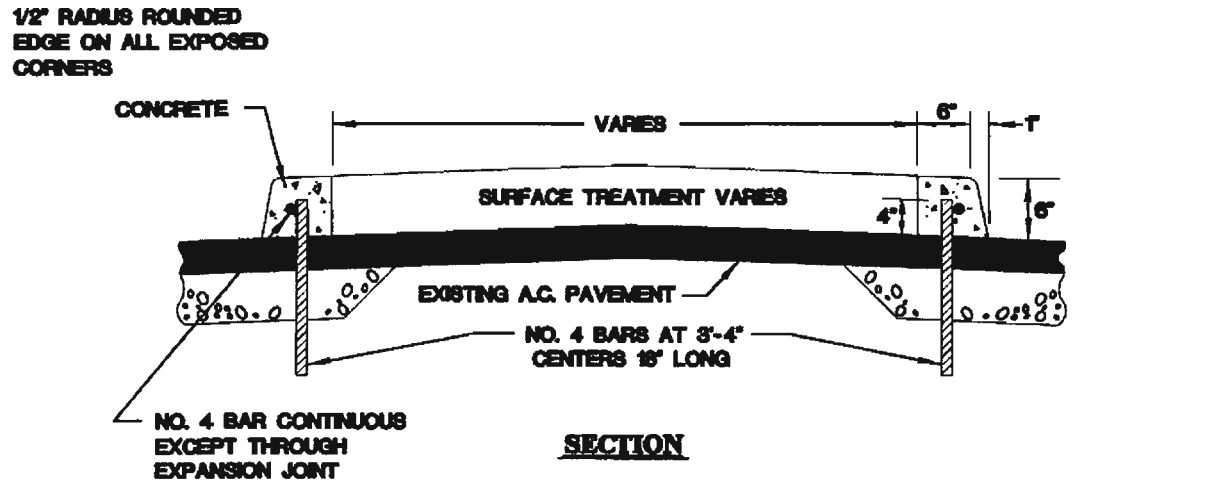

SECTION

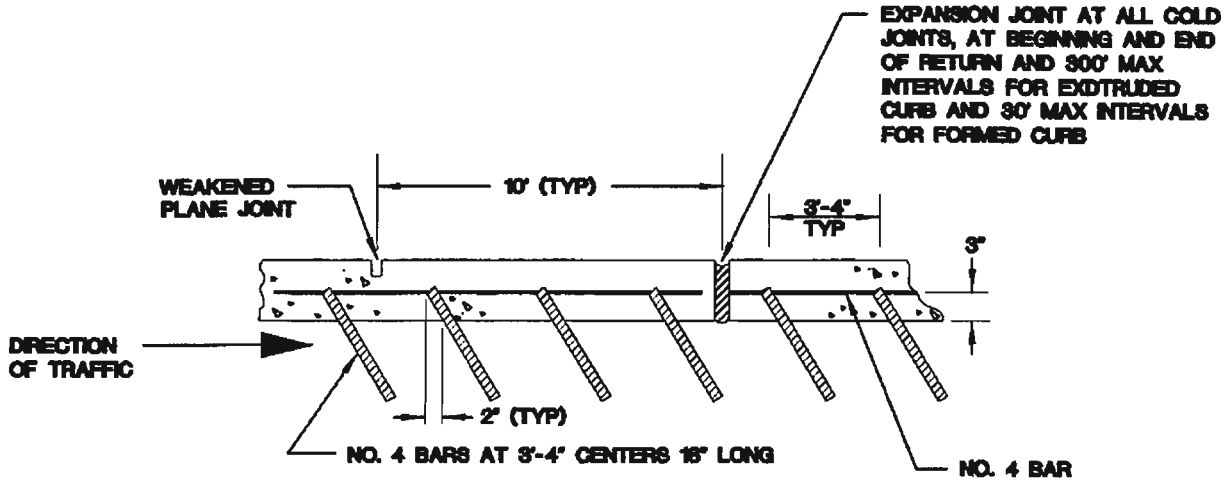

SIDE VIEW

NOTES:

1. FOR EXPANSION JOINT AND WEAKENED PLANE JOINT DETAIL, SEE STANDARD DRAWING NO. 234.
2. WEAKENED PLANE JOINTS EVERY 10' STAGGER WITH NO. 4 BARS.
3. ALL REINFORCING STEEL SHALL HAVE 2" CLEAR COVER UNLESS OTHERWISE SHOWN.
4. WHEN APPROVED BY THE ENGINEER/ENTITY, STRUCTURAL EPOXY ADHESIVE MAY BE USED IN LIEU OF NUMBER 4 DOWEL BAR EXCEPT AT CURB NOSE AND WITHIN 2 FEET OF ANY POINT OF CURVATURE.

SPECIFICATION REFERENCE		UNIFORM STANDARD DRAWINGS CLARK COUNTY AREA		
501	CONCRETE	TACK ON ISLAND CURB		
505	REINFORCING STEEL			
707	JOINT MATERIAL			
		DATE 01-13-05	DWG. NO. 220	PAGE NO. 26